jacco maris

jaccomaris.com

COCO

suspension lamp

COCO

The smooth Coco, designed by Jacco Maris and Wesly Boom, is shaped with the least amount of fuss. It has the look of a floating line of light. Beautiful diffuse light is spread through the translucent natural acrylic stone which is completely illuminated by the built-in LED element. The Coco collection is presented in 4 standard sizes and is available as a special in different sizes.

COCO

suspension lamp 120, 160 cm

CO.160.SU

color & material

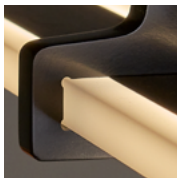

translucent
natural acrylic stone

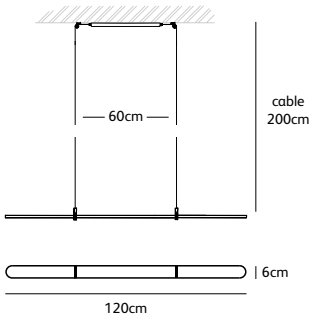

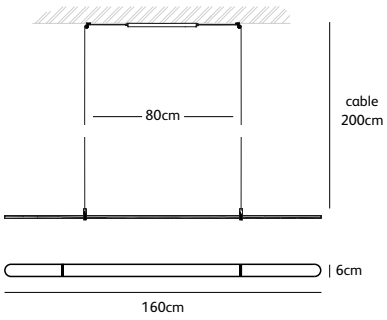

Order code	**CO.120.SU**
Dimensions	
Wxdxh	**120x6x1,2cm**
Standard cable length	**200cm**
Material	
Translucent natural acrylic stone	
Light source	
LED 23W / 2600K / 1090 lm	
Weight	
Net. weight	**1kg**
Driver	
Dimmable driver	
Dimmer not included	
Standard driver box	
24x8x4cm white (optional black)	

Order code	**CO.160.SU**
Dimensions	
Wxdxh	**160x6x1,2cm**
Standard cable length	**200cm**
Material	
Translucent natural acrylic stone	
Light source	
LED 30W / 2600K / 1420 lm	
Weight	
Net. weight	**1,3kg**
Driver	
Dimmable driver	
Dimmer not included	
Standard driver box	
24x8x4cm white (optional black)	

IP 20 Other sizes on request.

COCO

suspension lamp 200, 240 cm

CO.200.SU

color & material

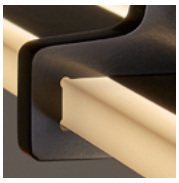

translucent
natural acrylic stone

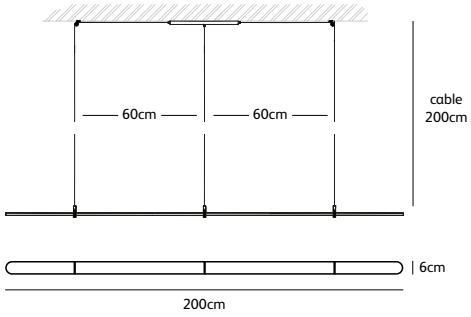

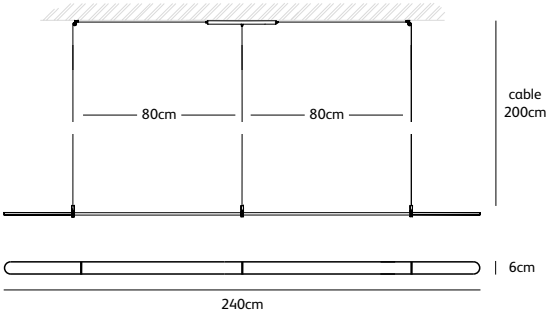

Order code	**CO.200.SU**
Dimensions	
Wxdxh	**200x6x1,2cm**
Standard cable length	**200cm**
Material	
Translucent natural acrylic stone	
Light source	
LED 38W / 2600K / 1800 lm	
Weight	
Net. weight	**1,6kg**
Driver	
Dimmable driver	
Dimmer not included	
Standard driver box	
24x8x4cm white (optional black)	

Order code	**CO.240.SU**
Dimensions	
Wxdxh	**240x6x1,2cm**
Standard cable length	**200cm**
Material	
Translucent natural acrylic stone	
Light source	
LED 46W / 2600K / 2200 lm	
Weight	
Net. weight	**2kg**
Driver	
Dimmable driver	
Dimmer not included	
Standard driver box	
24x8x4cm white (optional black)	

IP 20 CE Other sizes on request.

Colors and materials as visible on the images may differ slightly from reality.
Any typing errors in the text and interim changes to the collections or specifications are all subject to change.

Jacco Maris Design info@jaccomaris.com www.jaccomaris.com
07/01/2022